EXAMPLE: LINEAR SEGMENT WITH PARABOLIC BLENDS

A 3-DOF ROBOT HAS THE FOLLOWING BOUNDARY CONDITIONS AND VELOCITY REQUIREMENTS.

#	θ_i	θ_F	ω	t_F
1	20°	85°	5°/s	15 s
2	15°	-120°	-9°/s	20 s
3	-7°	59°	11°/s	9 s

DETERMINE THE POSITIONS, VELOCITIES AND ACCELERATIONS FOR EACH JOINT. DETERMINE THE BLEND TIME AND PLOT THE GRAPHS FOR POSITION, VELOCITY AND ACCELERATION IN EACH CASE.

SOLUTION:

JOINT 1:-

BLENDING TIME $t_{B1} = \dfrac{\theta_{1i} - \theta_{1F} + \omega_1 t_{F1}}{\omega_1}$

$$= \frac{20 - 85 + 5 \times 15}{5}$$

$$= \underline{\underline{2\,s}}$$

FOR $\theta_1 = 20°$ TO θ_A

$$\theta_1(t) = \frac{\omega_1}{2t_{B1}} t^2 + \theta_{1i}$$

$$= 1.25t^2 + 20$$

$$\dot{\theta}_1(t) = \frac{\omega_1 t}{t_{B1}} = 2.5t$$

$$\ddot{\theta}_1(t) = 2.5\,°/s^2$$

$$\theta_A(t_B) = \frac{\omega_1 t_{B1}}{2} + \theta_{1i} = 25°$$

FOR $\theta_1 = \theta_A$ TO θ_B

$$\theta_1(t) = \omega_1 (t - t_{B1}) + \theta_A$$

$$= 5t + 15$$

$$\dot{\theta}_1(t) = \omega_1 = 5\,°/s$$

$$\ddot{\theta}_1(t) = 0\,°/s^2$$

FOR $\theta_1 = \theta_B$ TO θ_F (=85°)

$$\theta_1(t) = -\frac{\omega}{2t_B}(t - t_F)^2 + \theta_F$$

$$= -1.25t^2 + 37.5t - 196.25$$

$$\dot{\theta}_1(t) = -\frac{\omega}{t_B}(t - t_F) = -2.5t + 37.5$$

$$\ddot{\theta}(t) = -\frac{\omega}{t_B} = -2.5\,°/s^2$$

$$\theta_B(t) = -\frac{\omega_1 t_B}{2} + \theta_F = 80°$$

JOINT 2:- BLENDING TIME $t_{B2} = \dfrac{\theta_{2i} - \theta_{2F} + \omega_2 t_{F2}}{\omega_2}$

$$= \frac{15 + 120 - 9 \times 20}{-9}$$

$$= \underline{\underline{5s}}$$

FOR $\theta_2 = 15^\circ$ TO θ_A

$$\theta_2(t) = \frac{\omega_2}{2t_{B2}} t^2 + \theta_{2i}$$

$$= -0.9\, t^2 + 15$$

$$\dot{\theta}_2(t) = \frac{\omega_2 t}{t_{B2}} = -1.8t$$

$$\ddot{\theta}_2(t) = \frac{\omega_2}{t_{B2}} = -1.8\,^\circ/s^2$$

$$\theta_{A2}(t) = \frac{\omega_2 t_{B2}}{2} + \theta_{2i} = -7.5^\circ$$

FOR $\theta_2 = \theta_A$ TO θ_B

$$\theta_2(t) = \omega_2 (t - t_{B2}) + \theta_{A2}$$

$$= -9t + 37.5$$

$$\dot{\theta}_2(t) = \omega_2 = -9\,^\circ/s$$

$$\ddot{\theta}_2(t) = 0\,^\circ/s^2$$

FOR $\theta_2 = \theta_B$ TO $\theta_F (= -120^\circ)$

$$\theta_2(t) = -\frac{\omega_2}{2t_{B2}} (t - t_F)^2 + \theta_F$$

$$= 0.9t^2 - 36t + 240$$

$$\dot{\theta}_2(t) = -\frac{\omega_2}{t_{B2}} (t - t_F)$$

$$= 1.8t - 36$$

$$\ddot{\theta}_2(t) = -\frac{\omega_2}{t_{B2}} = 1.8\,^\circ/s^2$$

$$\theta_{B2}(t) = -\frac{\omega_2 t_{B2}}{2} + \theta_F = -97.5^\circ$$

JOINT 3:- BLENDING TIME $t_{B3} = \dfrac{\theta_{3i} - \theta_{3F} + \omega_3 t_{F3}}{\omega_3}$

$$= \frac{-7 - 59 + 11 \times 9}{11}$$

$$= \underline{\underline{3s}}$$

FOR $\theta_3 = -7^\circ$ TO θ_A

$$\theta_3(t) = \frac{\omega_3}{2t_{B3}} t^2 + \theta_{3i}$$

$$= 1.83t^2 - 7$$

$$\dot{\theta}_3(t) = \frac{\omega_3 t}{t_{B3}} = 3.67t$$

$$\ddot{\theta}_3(t) = \frac{\omega_3}{t_{B3}} = 3.67\,^\circ/s^2$$

$$\theta_{A3}(t) = \frac{\omega_3 t_{B3}}{2} + \theta_{3i} = 9.5^\circ$$

FOR $\theta_3 = \theta_A$ TO θ_B

$$\theta_3(t) = \omega_3 (t - t_{B3}) + \theta_{A3}$$

$$= 11t - 23.5$$

$$\dot{\theta}_3(t) = \omega_3 = 11\,^\circ/s$$

$$\ddot{\theta}_3(t) = 0\,^\circ/s^2$$

FOR $\theta_3 = \theta_B$ TO $\theta_F (= 59^\circ)$

$$\theta_3(t) = \frac{-\omega_3}{2t_{B3}} (t - t_F)^2 + \theta_F$$

$$= -1.83t^2 + 33t - 89.5$$

$$\dot{\theta}_3(t) = -\frac{\omega_3}{t_{B3}} (t - t_F)$$

$$= -3.67t + 216.3$$

$$\ddot{\theta}_3(t) = -\frac{\omega_3}{t_{B3}} = -3.67\,^\circ/s^2$$

$$\theta_{B3}(t) = -\frac{\omega_3 t_{B3}}{2} + \theta_F = 42.5^\circ$$

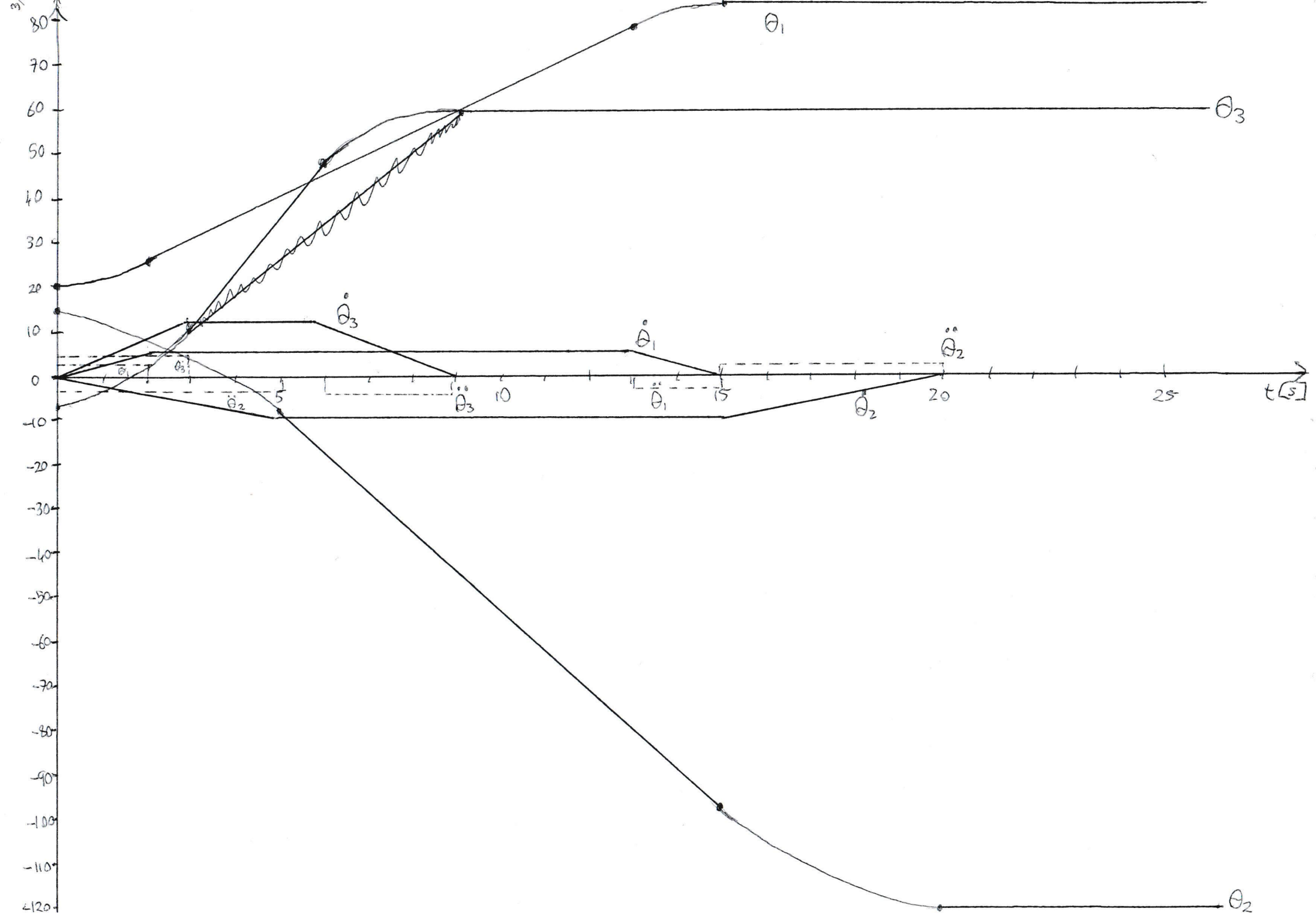
3)
80
70
60
50
40
30
20
10
0
-10
-20
-30
-40
-50
-60
-70
-80
-90
-100
-110
-120
5
10
15
20
25
t [s]
θ_1
θ_3
θ_2
$\dot{\theta}_3$
$\dot{\theta}_1$
$\ddot{\theta}_2$
$\ddot{\theta}_3$
$\ddot{\theta}_1$
$\dot{\theta}_2$